7-160 Concealed Hinge Pr03 120°

door bending 26mm, for surface mounted door, stainless steel AISI 304

120° Concealed hinge for surface mounted door.
- RH or LH application.
- Frame-part: screw-on, door-part: weld-on or screw-on.
- The POM pin is self-securing.

Material:
- **Hinge parts and pin:** stainless steel AISI 304 a2)
- **Pin:** POM natural

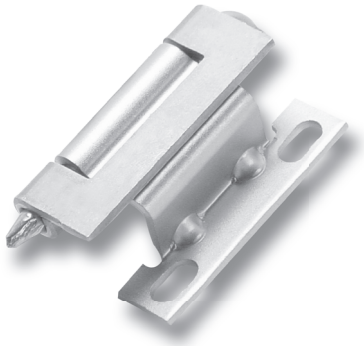

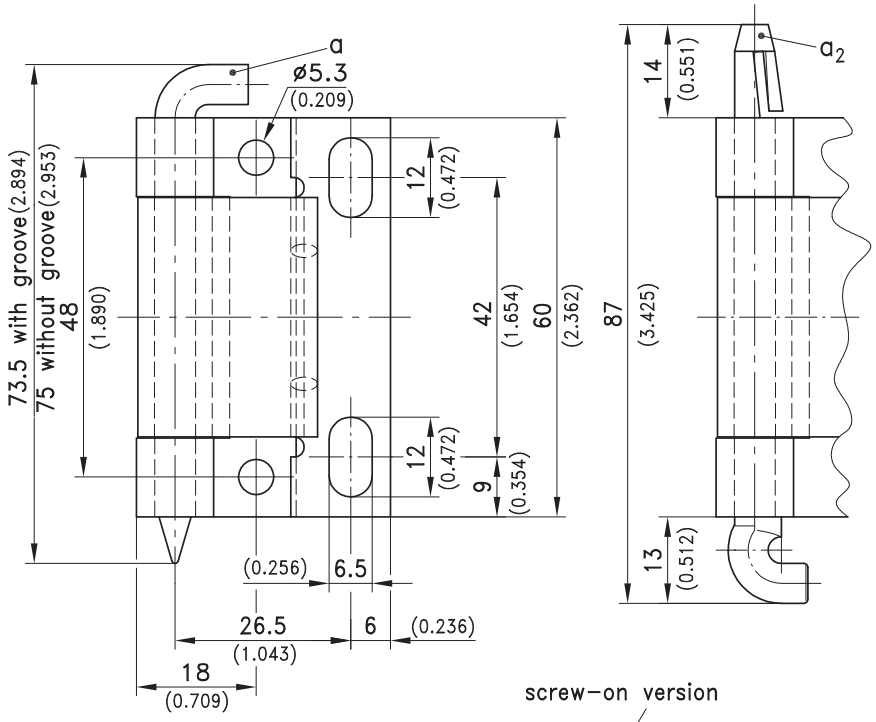

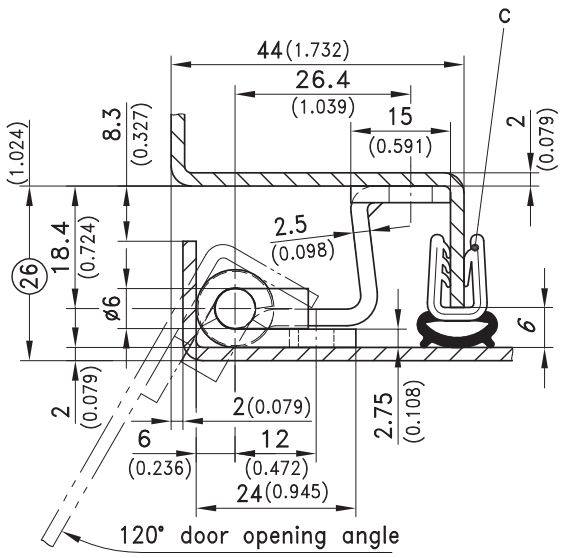

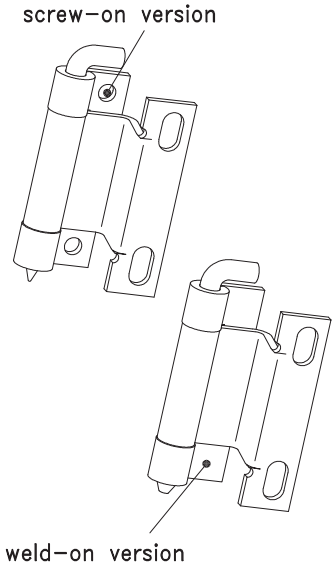

120° Concealed Hinge	door-part screw-on	door-part weld-on	see page
a) Pin without groove, stainless steel	216-9104	216-9122	
a1) Pin with groove for retaining ring, stainless steel	216-9112	216-9126	
a2) Pin, POM	216-9106	216-9124	
Optional:			
b) Retaining ring DIN 6799 RS4 for versions a1)	800-0138	800-0138	
c) e.g. Clip-on profile	209-0201	209-0201	07.19

DIRAK GmbH Königsfelder Str. 1 58256 Ennepetal
Tel.: 02333.837-0 Fax: 02333.837-100 www.dirak.com

06.02.2012

© copyright by DIRAK / Germany