7-105 Quarter-Turn Pr20.1 L18

for cutout 20.1, length 18, with round rod, stainless steel AISI 316

15 Nm | IP 65 | ↔20 | DIRAK RoHS WEEE compliant

Stainless steel 3-point system, screw-in type.
- RH or LH application.
- Water- and dust-tight according to IP65 DIN EN 60529.

Material:
- **Housing, nut, insert, cam, round rod and adapter:** stainless steel AISI 316
- **Rollers and rod guides:** PA, black

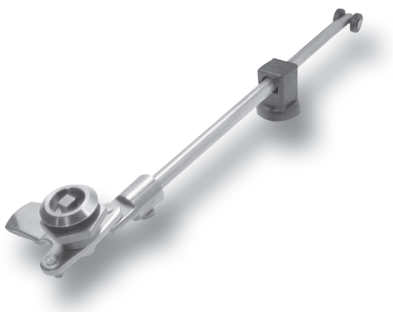

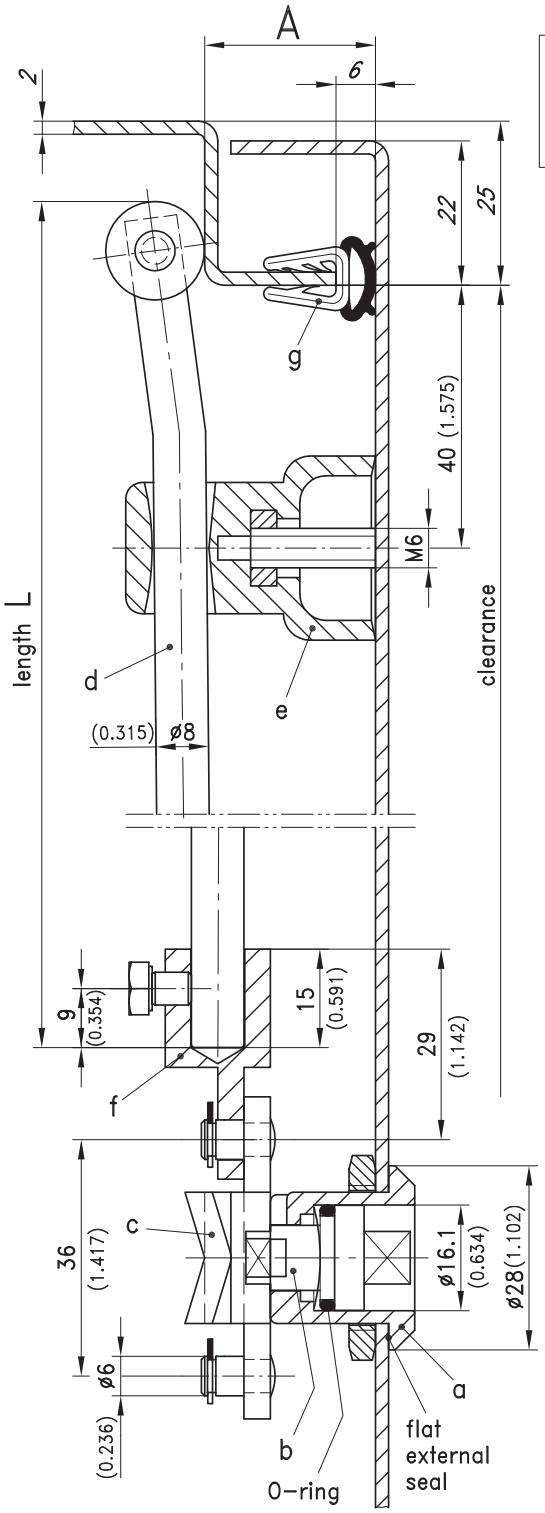

For custom length rods as product system 7–106 the lenght L for rod control at the door center is:

$$L = \frac{\text{clearance} - 12\text{mm}(0.472)}{2(0.079)}$$

	Part No.	see page
a) Housing with single sided grounding nut (stainless steel) and flat external seal	200-9043	
b) Insert with screw, wave washer and O-ring		
Square 6mm	200-9146	
Square 7mm	200-9119	
Square 8mm	200-9120	
Triangular 7mm	200-9121	
Triangular 8mm	200-9122	
Double bit 3mm	200-9123	
Double bit 5mm	200-9124	
Slotted 2x4mm deep	200-9151	
7/16" hex.	200-9192	
Socket hex. 8 mm (5/16")	200-9195	
Socket hex. 8 mm (5/16"), with pin	100-9118	
c) 3-point cam		
for bending A20	200-9845.00-00022	
for bending A26	200-9845.00-00028	
2-point-cam	200-9899	
d) Round rods Ø8 with rollers		
Length in mm/inch		
600/23.622	201-9010	
700/27.559	201-9011	
800/31.496	201-9012	
900/35.433	201-9013	
1000/39.370	201-9014	
1100/43.307	201-9015	
1200/47.244	201-9016	
e) Rod guide for bending A20	200-3601.03	02.99
Rod guide for bending A26	200-3602.03	02.99
f) Adapter for round rods		02.103, 02.102
Key for inserts		09.10, 09.11
g) e.g. Clip-on profile	209-0201	07.19

© copyright by DIRAK / Germany